TYPICAL BORE DETAIL PER MAG SPEC 608 (1)

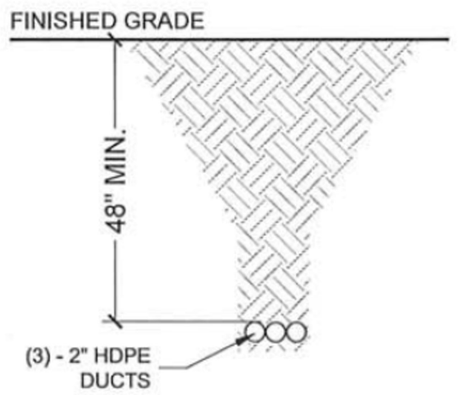

ALL HDD BORING SHALL BE PERFORMED IN ACCORDANCE WITH MAG SPEC #608

TYPICAL 36" X 60" X 36" HANDHOLE BOX (2)

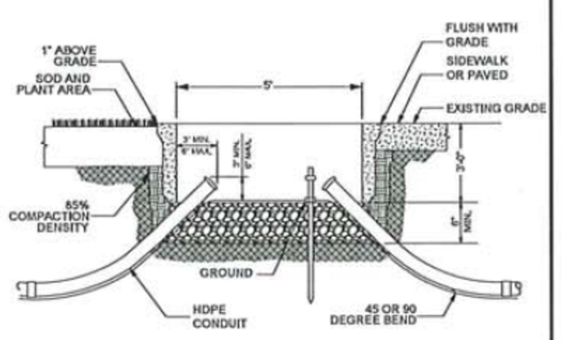

REFERENCE SHEET D1, FOR ADDITIONAL INFORMATION

LANDSCAPE BORE PIT DETAIL (3)

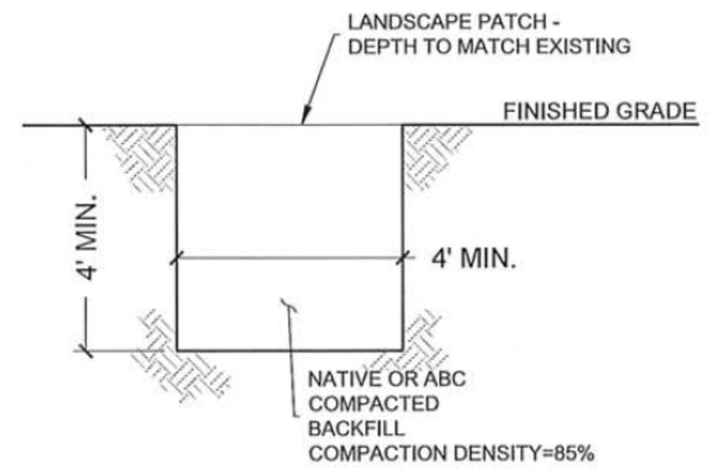

TYPICAL BORE CROSSING DETAIL - WATER (4)

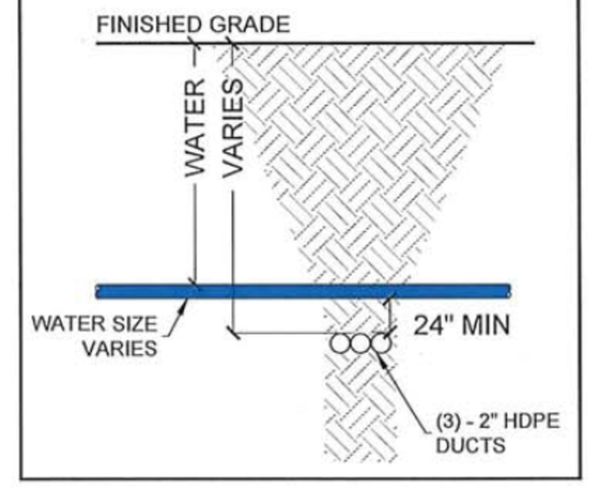

TYPICAL BORE CROSSING DETAIL - SEWER (5)

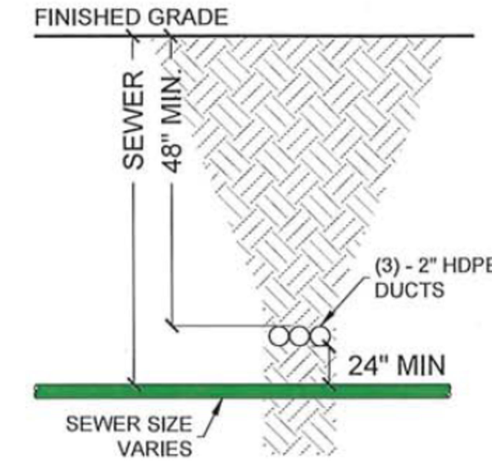

UTILITY POTHOLE DETAIL PER MAG 212 (6)

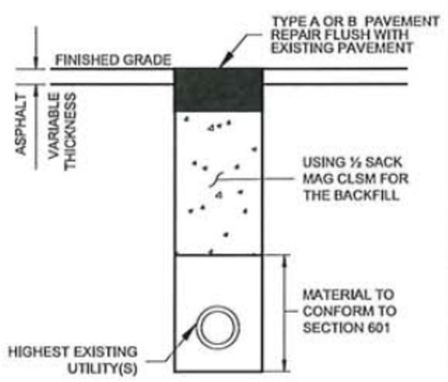

LANDSCAPE UTILITY POTHOLE DETAIL (7)

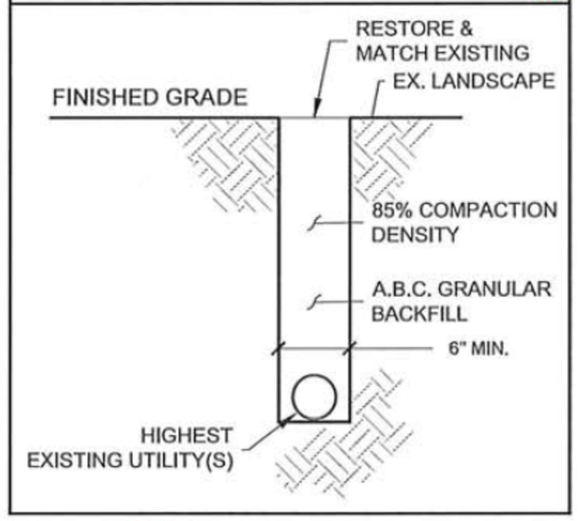

LANDSCAPE TRENCH DETAIL (8)

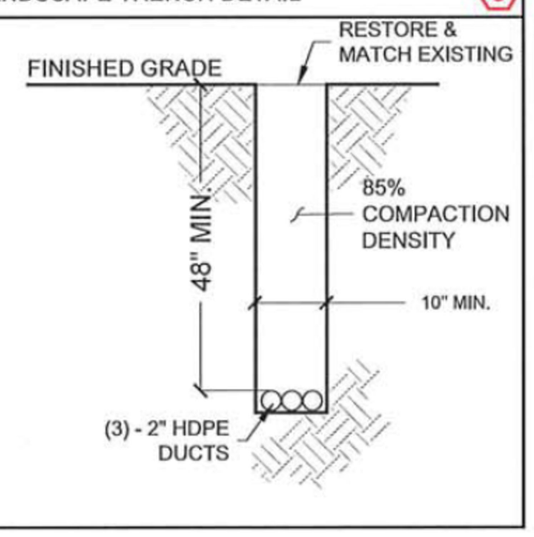

CONCRETE BORE PIT DETAIL & POTHOLE DETAIL (9)

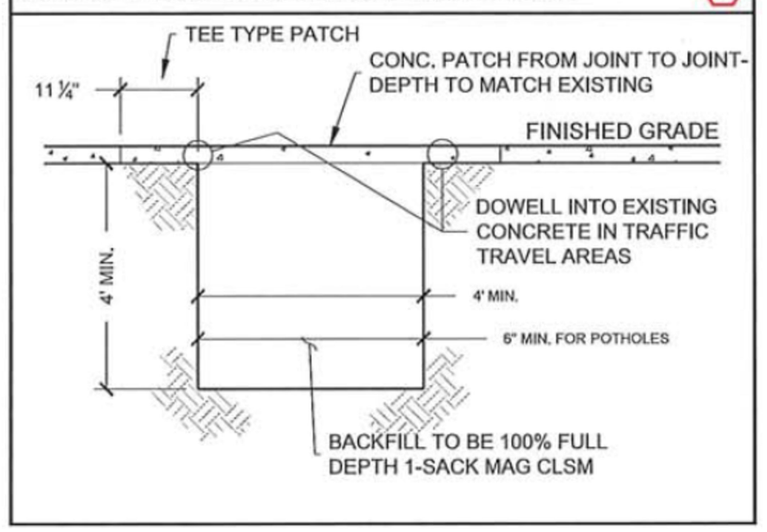

ASPHALT CONCRETE BORE PIT REPAIR & ASPHALT CONCRETE OPEN CUT TRENCH REPAIR (10)

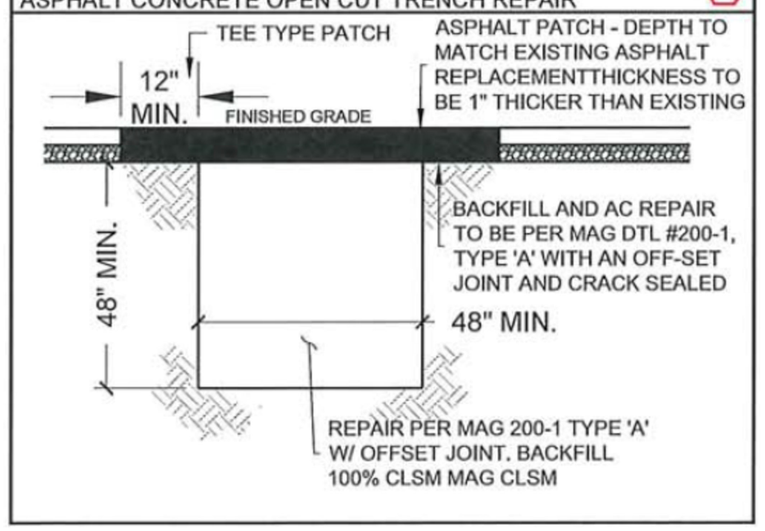

PULL THRU EX. DUCT (11)

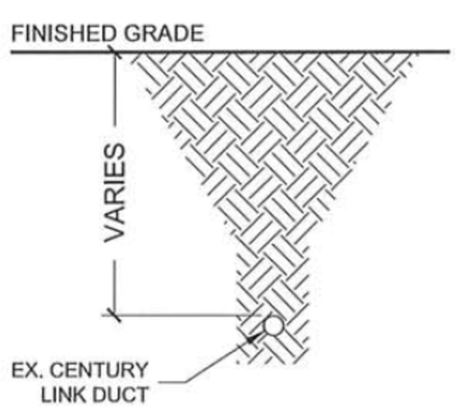

TYPICAL BORE CROSSING DETAIL - STORM (12)

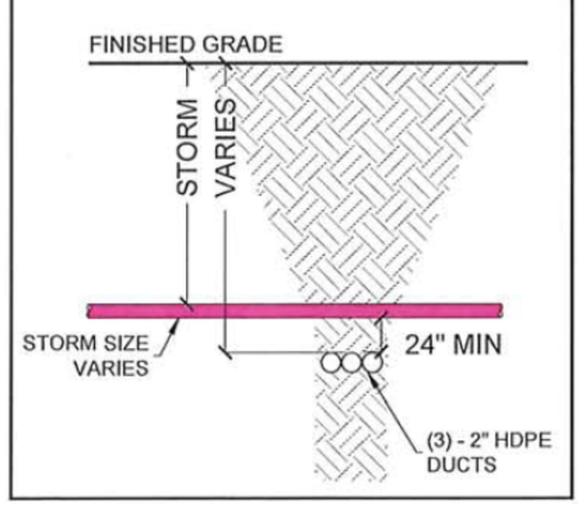

CONCRETE TRENCH DETAIL DOWEL INTO EXISTING SLABS IN TRAFFIC AREAS (13)

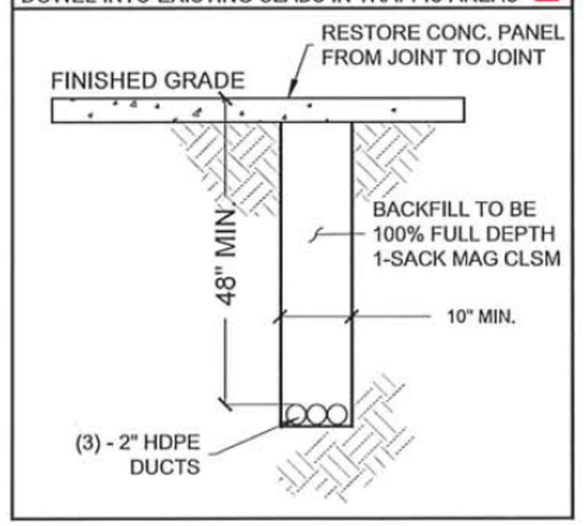

TYPICAL BORE CROSS. DETAIL-DRY UTILITY (14)

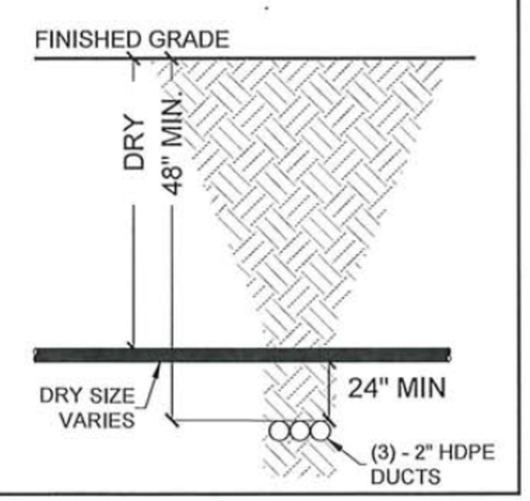

Two working days before you dig, CALL FOR THE BLUE STAKES 263-1100 800-782-5348 Blue Stake Center

(FIRM INFORMATION HERE)

NAME

PROJECT NAME: NAME

PLAN TYPE: TELECOMMUNICATION PLANS

SEALED

ORIGINAL PLAN DATE

LATEST REVISION DATE

SHEET NUMBER

OF

PROJECT NUMBER

XXXX